Automatic Combiner Relay Controller (ACR) Applications Overview

An Automatic Combiner Relay (ACR) is often used in vehicle applications such as RVs, Work Trucks, Marine vessels, etc. to allow charging separate Chassis and House batteries from common charge sources such as an engine alternator, inverter/charger, solar. In a typical vehicle the chassis battery is reserved for engine starting, while the house battery is used for “hotel” (or house loads) or work-related loads. Normally, when the engine is running, the chassis battery is charging, but when the vehicle is stationary and connected to the power grid, the house battery is charging. Our intelligent ACR allows customers to take advantage of all situations to keep both batteries charged, while keeping them separate when charging is not available or not desirable.

Lithium batteries have an advantage of absorbing as much charge current as possible during the bulk charge stage, which could overheat and potentially damage stock engine alternators, so our intelligent ACR reduces the duty cycle and allows cooling periods. At the same time, a lithium battery requires charge termination when fully charged, so our ACR keeps it disconnected after the charge cycle is completed.

In addition, the Lithionics Battery® ACR provides solutions for less common use cases where 2nd alternator is installed to charge the house battery, but its internal regulator is not designed for fine charge control of lithium batteries, as well as cases where a 3rd party battery disconnect (ex. Mastervolt Charge Mate Pro 40) is used to current-limit the alternator, but needs an intelligent additional control to terminate the charge of a lithium battery.

Below is a functional diagram showing the typical components of a system where ACR is used to bridge Chassis and House batteries.

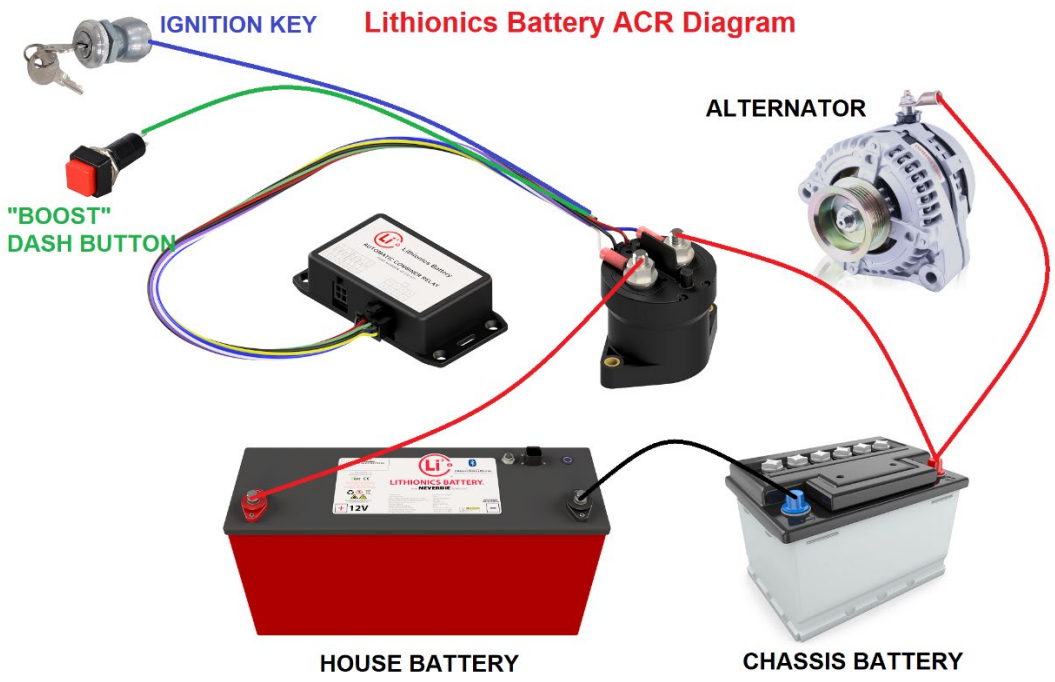

Revison: C

ACR Logic Table

ACR logic table below lists all possible functional states and entry/exit conditions for each state.

ACR STATE	State code	LED State	Enter conditions	ACR Contactor State	Exit conditions	Notes
STAND_BY	0	Short Blink	none, default state	OPEN	evaluate all inputs	all states exit into STAND_BY state
WARMING_UP	1	Slow Blink	Ignition change OFF -> ON	OPEN	(Warm_Up Timer > 30s) OR	
					Ignition = OFF	
HOUSE_CHARGING	2	Solid On	(Ignition = ON) AND	CLOSED	(Ignition = OFF) OR	
			(Chassis > 13.2) AND		(Chassis < 12.0)@30s OR	Chassis conditions are disabled when $CHASSIS=0 is set
			(House < 13.4V)		(House > 14.5V) OR	immediate disconnect if voltage reaches maximum allowed
					(House > 14.2V)@30min OR	allowing for 30 min absorption stage if voltage stays good
					(Genrun = ON) OR	generator inhibits alternator to prevent fighting of charge sources
					Charging Timer > 60min	
CHASSIS_CHARGING	3	Solid On	(Ignition = OFF) AND	CLOSED	(Ignition = ON) OR	Chassis function can be disabled in systems with 2nd alternator charging House and ACR controls the alternator via small relay
			(Chassis < 12.4V) AND		(Chassis < 12.0)@30s OR	Chassis conditions are disabled when $CHASSIS=0 is set
			(House > 13.4V)		Charging Timer > 60min	
RESTING	4	Slow Blink	Charging Timer > 60m	OPEN	(Charging Timer > 75min) OR	15 min resting period to cool off the alternator and settle down battery voltages, then repeat charge cycle as needed
					Ignition change	
BOOSTING	5	Solid On	Dash_Button change OFF -> ON	CLOSED	(Dash_Button Timer > 2min) OR	If button is pressed shortly, then merge for 2 minutes. If button is held down, then allow up to 15 min of merge time
					(Dash_Button = ON) AND (Timer > 15min)	
GEN_RUNNING	6	Slow Blink	Genrun = ON	OPEN	(Genrun = OFF) OR	
					BOOSTING state triggered	BOOSTING state disables GEN_RUNNING state
FAULT	7	Rapid Blink	(ACR_State = CLOSED) AND	OPEN	Ignition change	Possible contactor failure or loose lug when voltage across closed contactor is >0.5V
			ABS(Chassis - House) > 0.5V@5s			

ACR Wiring Diagram – Case #1 Classic Chassis-House Bridge

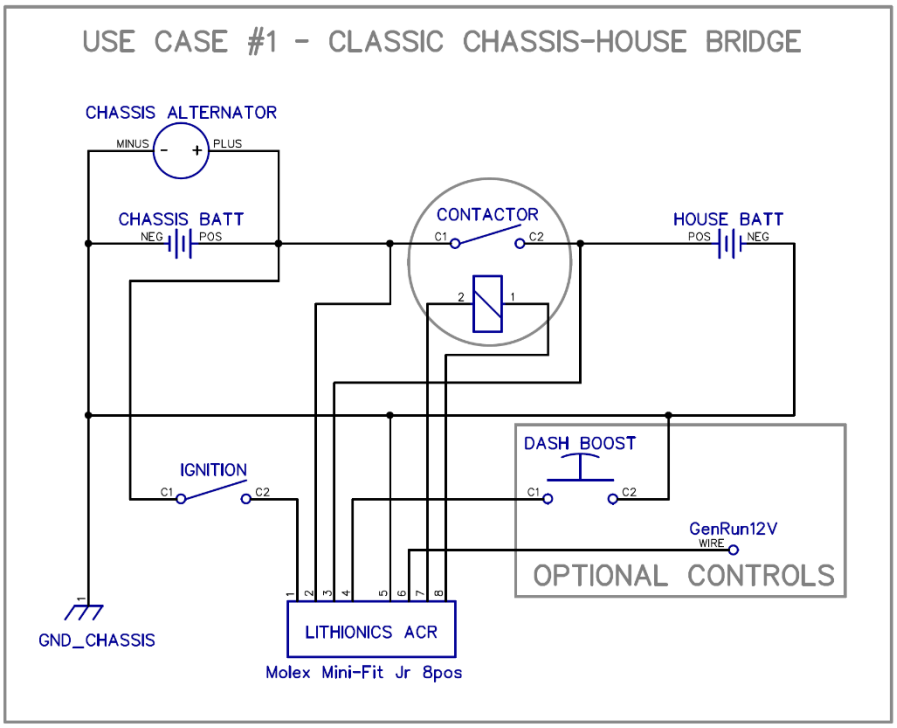

ACR Wiring Diagram – Case #2 Secondary Alternator Control

NOTE: Alternator is enabled by connecting its "L" a.k.a. Activation terminal to battery voltage and disabled by disconnecting from battery voltage.

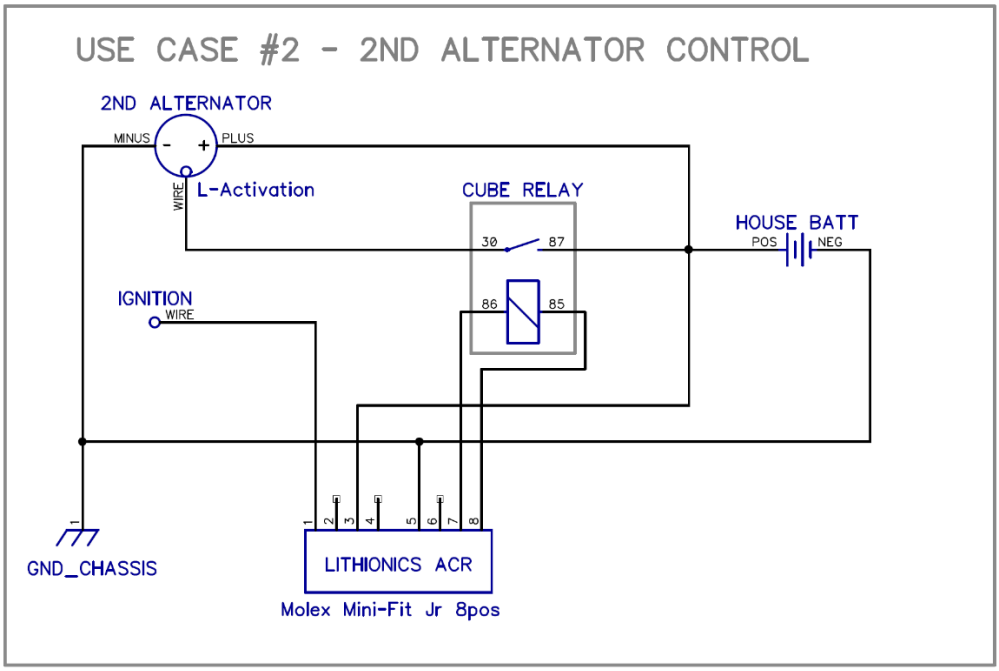

ACR Wiring Diagram – Case #3 Charge Mate Pro 40 Control

NOTE: Charge Mate is disabled by grounding its Switch terminal and enabled by floating the same terminal.

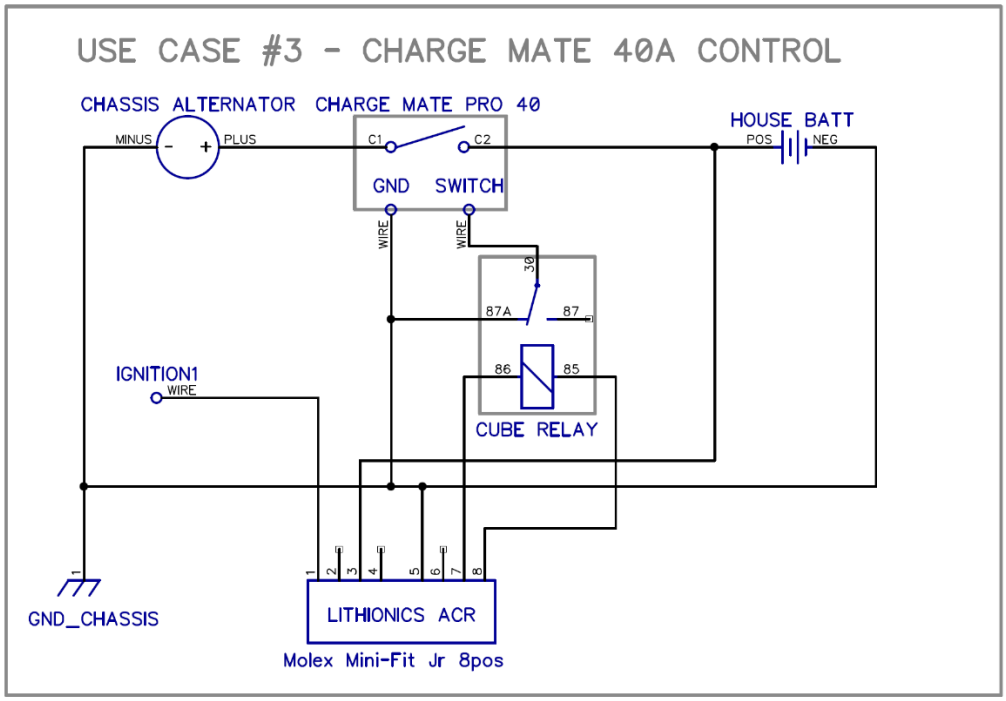

ACR Kits and Wiring Harnesses Options: With and Without Contactor

PARTS LIST

ITEM	QTY	PART NUMBER	DESCRIPTION	VENDOR	VENDOR PART NUMBER
1	1	50-273-KIT	ACR CONTROL MODULE	LITHIONICS BATTERY	50-273-KIT
2	1	53-154	AEV250 12V 250A NL CONTACTOR	ALTRAN	AEV250-M
3	1	75-273-PREMIUM	ACR HARNESS PREMIUM	LITHIONICS BATTERY	75-273-PREMIUM

REVISION HISTORY

REV	DESCRIPTION	DATE	APPROVED
A	INITIAL RELEASE	7/14/2021	JP
A.1	LOOSE PINS MOVED TO HARNESS	7/22/2021	JP
A.2	CONTACTOR CHANGE	10/20/2021	JP

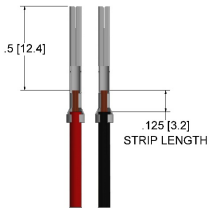

CRIMP DETAIL

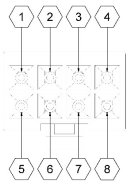

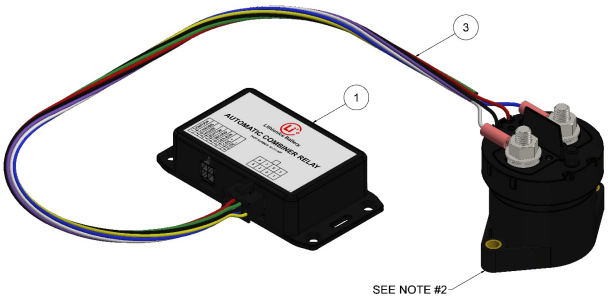

AEV250

COIL WIRES
NOT SHOWN

PINOUT DIAGRAM

POSITION	COLOR	FUNCTION
1	YELLOW	IGNITION
2	BLUE	CHASSIS
3	WHITE	HOUSE
4	PURPLE	DASH BUTTON
5	BLACK	GROUND
6	GREEN	GENRUN
7	RED	COIL+
8	BLACK	COIL -

NOTES:

1. CRIMP THE TWO LOOSE TERMINALS THAT ARE INCLUDED WITH HARNESS ON TO RED AND BLACK CONTACTOR COIL WIRES AND INSERT INTO OPEN CONNECTOR POSITIONS <7> AND <8> AS INDICATED ON PINOUT DIAGRAM
2. GENERIC CONTACTOR SHOWN, USE ALTRAN AEV250-M (53-154) OR LITHIONICS APPROVED EQUIVALENT

UNLESS OTHERWISE SPECIFIED:
DIMENSIONS ARE IN INCHES
TOLERANCES:
FRACTIONAL +/- 1/32
ANGULAR +/- 20' BEND +/-
TWO PLACE DECIMAL +/- .030
THREE PLACE DECIMAL +/- .005
Inspection Dimension

Lithionics Battery

DESCRIPTION: ACR KIT ASSEMBLY PREMIUM

PROJECT: BMS ELECTRONICS - Li3

PART NO.: 50-273-KIT-PREMIUM

REV A.2

THE INFORMATION CONTAINED IN THIS DRAWING IS THE SOLE PROPERTY OF LITHIONICS BATTERY. ANY REPRODUCTION IN PART OR AS A WHOLE WITHOUT THE WRITTEN PERMISSION OF LITHIONICS BATTERY IS PROHIBITED.

DO NOT SCALE | SHEET 1 OF 1

PARTS LIST

ITEM	QTY	PART NUMBER	DESCRIPTION	VENDOR	VENDOR PART NUMBER
1	1	75-273-STANDARD	ACR HARNESS STANDARD	LITHIONICS BATTERY	75-273-STANDARD
2	1	50-273-KIT	ACR CONTROL MODULE	LITHIONICS BATTERY	50-273-KIT

REVISION HISTORY

REV	DESCRIPTION	DATE	APPROVED
A	INITIAL RELEASE	7/14/2021	JP

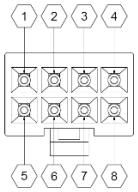

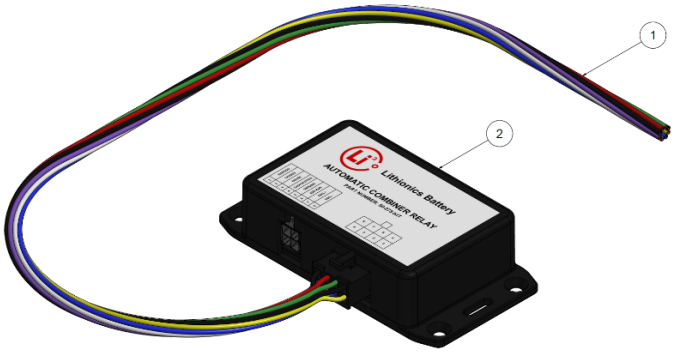

PINOUT DIAGRAM

POSITION	COLOR	FUNCTION
1	YELLOW	IGNITION
2	BLUE	CHASSIS
3	WHITE	HOUSE
4	PURPLE	DASH BUTTON
5	BLACK	GROUND
6	GREEN	GENRUN
7	RED	COIL+
8	BLACK	COIL -

NOTES:

1. INSERT CONNECTOR INTO ACR CONTROL MODULE AS SHOWN

UNLESS OTHERWISE SPECIFIED:
DIMENSIONS ARE IN INCHES
TOLERANCES:
FRACTIONAL +/- 1/32
ANGULAR +/- 20' BEND +/-
TWO PLACE DECIMAL +/- .030
THREE PLACE DECIMAL +/- .005
Inspection Dimension

Lithionics Battery

DESCRIPTION: ACR KIT ASSEMBLY STANDARD

PROJECT: BMS ELECTRONICS - Li3

PART NO.: 50-273-KIT-STANDARD

REV A

THE INFORMATION CONTAINED IN THIS DRAWING IS THE SOLE PROPERTY OF LITHIONICS BATTERY. ANY REPRODUCTION IN PART OR AS A WHOLE WITHOUT THE WRITTEN PERMISSION OF LITHIONICS BATTERY IS PROHIBITED.

DO NOT SCALE | SHEET 1 OF 1