LITHIONICS BATTERY®

LITHIUM ION IRON PHOSPHATE BATTERY SYSTEMS

MODEL NUMBER:
GTR12V600A-F39-DIN-MODULE

EXTERNAL BMS VERSION

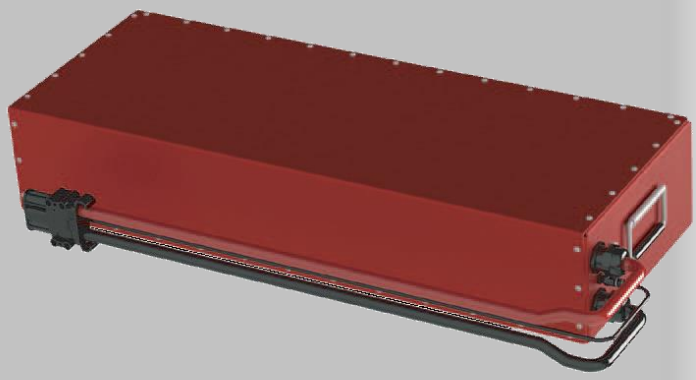

EXTERNAL BMS REQUIRED

BMS SOLD SEPARATELY. SEE BMS DATA SHEET PROVIDED BY LITHIONICS BATTERY®.

Item		Description
Model		GTR12V600A-F39-DIN-MODULE
Nominal Voltage		12.8
Nominal Capacity		600
Nominal Watt Hours		7680
Internal Resistance		<300 milliohms
Charge		
Charging temperature range		32F/0C to 113F/45C
Charge voltage		14.6
Recommended float charge voltage(for standby use)		13.4
Recommended charge current*		300
Allowed max charge current*		400
Discharge		
Discharging temperature range		-4F/-20C to 131F/55C
Operating Voltage Range		11.6 to 13.4
Recommended discharge current*		300
Max discharge current*		400
Pulse discharge current		6000
Discharge cut-off voltage		NeverDie® Power Reserve @ 12.00 Low-Voltage Cut-Off @11.60
Mechanical		
Dimensions		Length 39.0"
		Width 14.12"
		Height 8"
Weight		Approx. 169lbs (76.7kg)
Storage		
Storage Temperature & Humidity Range	< 1 Month	-4~95°F (-20~35°C), 45~75%RH
	< 3 Months	14~86°F (-10~30°C), 45~75%RH
	Recommended storage	59~95°F (15~35°C), 45%RH~75%RH
Long Term Storage	If the battery needs to be stored for > 3 months the voltage should be 13.2V (50%SOC), and stored at the recommended storage specifications shown above. Additionally, the battery needs at least one charge & discharge cycle every six months.	
Self-discharge rate	Residual capacity	≤3% per month; ≤15% per year
	Reversible capacity	≤1.5%per month; ≤8% per year

* Maximum charging and discharging rates apply depending upon the ambient temperature and duty cycle of the system. UL1973 tests of maximum charge and discharge current were performed at 25°C/77°F

NEVERDIE®

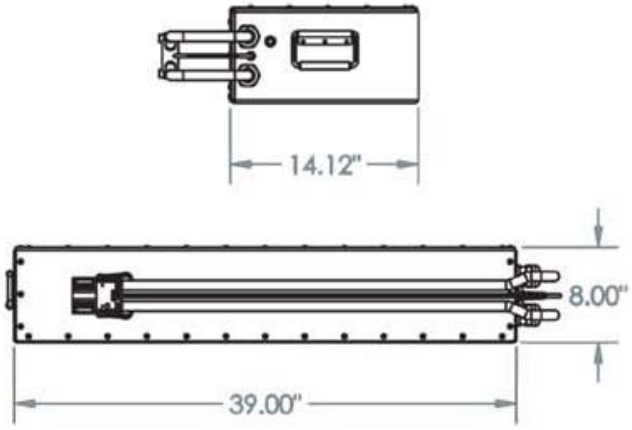

ENERGY

600 AMP HOURS

PULSE AMPS: 6000 (1 SEC)

7680 WATT-HOURS

WARNING

1. LITHIUM BATTERIES ARE NOT DESIGNED FOR CHARGING IN SUB-FREEZING TEMPERATURES. CONTACT LITHIONICS BATTERY® FOR DETAILS ON OUR COLD WEATHER PACKAGE.
2. INSTALLATION: IT IS RECOMMENDED THAT BATTERIES BE INSTALLED CABLE OR TERMINAL SIDE UP.

NOTE: CONTACT LITHIONICS BATTERY® FOR A USER INSTALLATION GUIDE & STORAGE PROCEDURES. FOLLOW THE GUIDE TO ENSURE FITNESS OF USE & WARRANTY.

12V
GTR
SERIES