LITHIONICS BATTERY®

LITHIUM-ION IRON PHOSPHATE BATTERY SYSTEMS

PART NUMBER:
AP037 SERIES – DUAL CHANNEL (300A CONTINUOUS RATING)

NEVERDIE®
EXTERNAL BMS

NeverDie® BMS Features	Dual Channel Series (12V to 51V)
OptoLoop® Cell Monitoring	✓
MiniBMS® Cell Balancing	✓
NeverDie Reserve (Reset/Power Switch)	✓
Low-Voltage Cutoff Protection (Over-Discharge)	✓
High-Voltage Cutoff Protection (Over-Charge)	✓
Short Circuit Protection	✓
Current Direction Based Temperature Intervention Sensor	✓
UL Approved Fully Redundant Protective Safety Circuits	✓
Military Grade Latching Contactor with Aux Contact Monitoring	✓
Coulomb Based State-of-Charge Meter	✓
Programmable NeverDie Reserve & AGSR	✓
State of Health Monitoring (Status & Fault Codes)	✓
BMS Data Telemetry – CANBus	✓
BMS Data Telemetry – Bluetooth or Serial Port	Order Option
BMS Data Telemetry – Ethernet TCP/IP	Optional
Dual Channel (Independent Charge/Discharge Channels)	✓
Redundant Coil-Driven Contactor	
Internal Pre-Charge Circuit (Programmable)	

Ampseal I/O Features	Advanced (23-Pin)
Alternator Field Control Circuit (FCC)	✓
CANBus (Supports RV-C BMS Data & NCC Charger Series)	✓
Remote Power Switch	✓
Serial UART BMS Data Telemetry (Alternate: Serial RS232)	✓
Automatic Generator Start/Restart (AGSR)	✓
External Pre-Charge Circuit Control (Alternate: Heater Power)	✓
BMS Auxiliary Power Input (AC Sense)	✓
High Voltage Charger Interlock	✓
Tri-Color LED Pod (Alternate: LED for Remote Reset Switch)	✓
Alarm Circuit	✓
Battery Percent (0-5V Signal)	✓
Emergency Stop Input (E-Stop Circuit)	✓

To see full list of comparison, reference the NeverDie® BMS Catalog available on the homepage of our website. https://lithionicsbattery.com

DUAL CHANNEL NEVERDIE® ACCESSORIES

Independent Charge Channel

Bluetooth® Transmitter

Round SOC Display

DIMENSIONS

11.25 X 4.06 X 22.00
Measured in inches

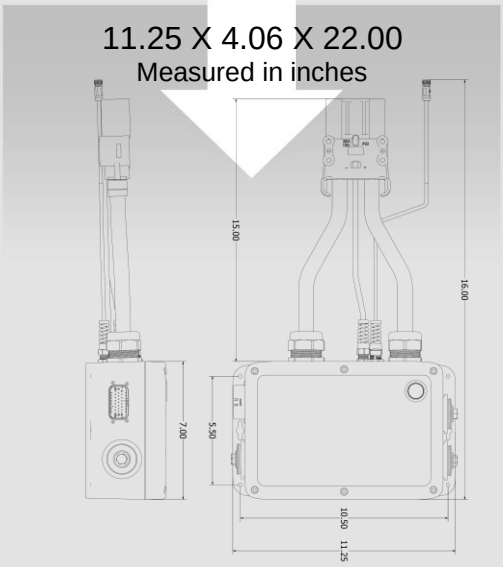

NOTE: CONTACT LITHIONICS BATTERY® FOR A USER INSTALLATION GUIDE & STORAGE PROCEDURES. FOLLOW THE GUIDE TO ENSURE FITNESS OF USE & WARRANTY.